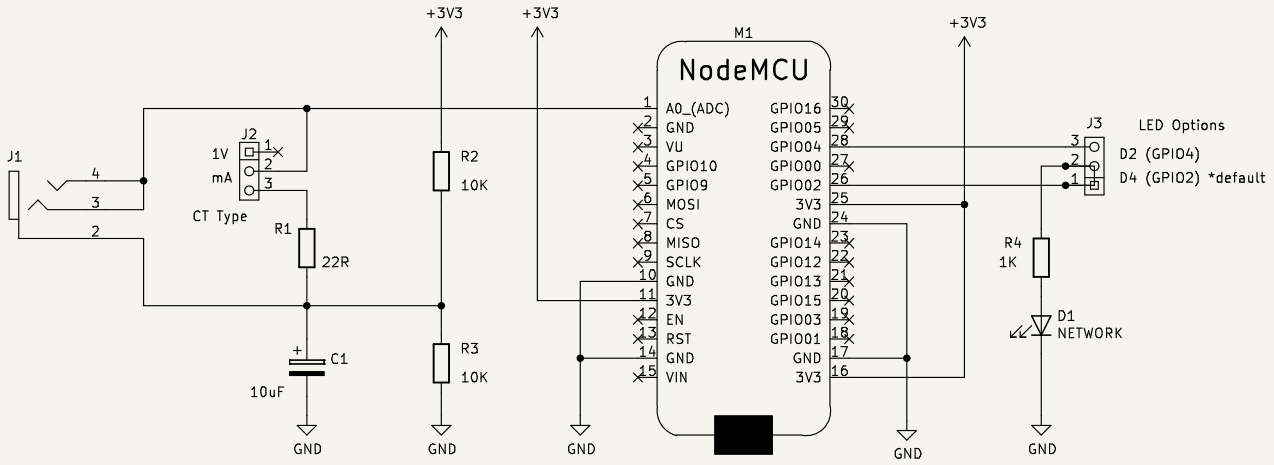

Fix_Hole1 Fix_Hole2 Fix_Hole3 Fix_Hole4

MottramLabs File: Node-MCU Single Sensor - 201207.kicad_sch		
Title: Node-MCU Single Channel - 201208		
Size: A4	Date: 6th February 2024	**Rev: 1.0**