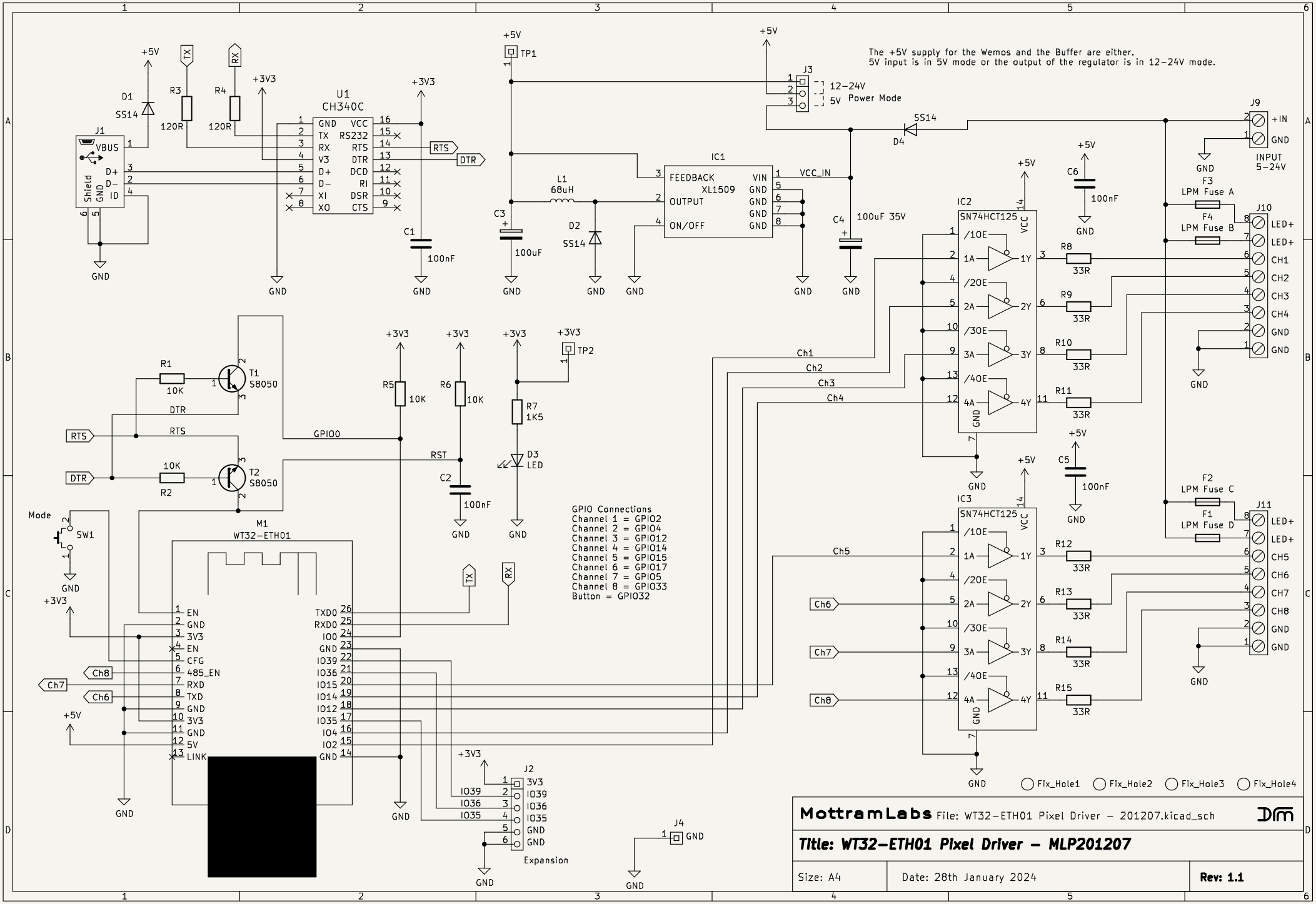
The +5V supply for the Wemos and the Buffer are either.
5V input is in 5V mode or the output of the regulator is in 12-24V mode.
J1
VBUS
D+
D-
ID
GND
Shield
D1
SS14
R3
120R
R4
120R
TX
RX
U1
CH340C
GND
TX
RX
V3
D+
D-
XI
XO
VCC
RS232
RTS
DTR
DCD
RI
DSR
CTS
C1
100nF
TP1
J3
12-24V
5V
Power Mode
D4
SS14
IC1
XL1509
FEEDBACK
OUTPUT
ON/OFF
VIN
GND
VCC_IN
L1
68uH
D2
SS14
C3
100uF
C4
100uF 35V
J9
+IN
GND
INPUT
5-24V
F3
LPM Fuse A
F4
LPM Fuse B
J10
LED+
LED+
CH1
CH2
CH3
CH4
GND
GND
IC2
SN74HCT125
/1OE
1A
/2OE
2A
/3OE
3A
/4OE
4A
1Y
2Y
3Y
4Y
VCC
GND
C6
100nF
R8
33R
R9
33R
R10
33R
R11
33R
Ch1
Ch2
Ch3
Ch4
C5
100nF
F2
LPM Fuse C
F1
LPM Fuse D
J11
LED+
LED+
CH5
CH6
CH7
CH8
GND
GND
IC3
SN74HCT125
Ch5
Ch6
Ch7
Ch8
R12
33R
R13
33R
R14
33R
R15
33R
R1
10K
T1
S8050
R2
10K
T2
S8050
DTR
RTS
GPIO0
RST
R5
10K
R6
10K
C2
100nF
TP2
R7
1K5
D3
LED
Mode
SW1
M1
WT32-ETH01
EN
GND
3V3
EN
CFG
485_EN
RXD
TXD
GND
3V3
GND
5V
LINK
TXD0
RXD0
IO0
GND
IO39
IO36
IO15
IO14
IO12
IO35
IO4
IO2
GND
Ch8
Ch7
Ch6
J2
3V3
IO39
IO36
IO35
GND
GND
Expansion
J4
GND
GPIO Connections
Channel 1 = GPIO2
Channel 2 = GPIO4
Channel 3 = GPIO12
Channel 4 = GPIO14
Channel 5 = GPIO15
Channel 6 = GPIO17
Channel 7 = GPIO5
Channel 8 = GPIO33
Button = GPIO32
Fix_Hole1
Fix_Hole2
Fix_Hole3
Fix_Hole4
MottramLabs
File: WT32-ETH01 Pixel Driver - 201207.kicad_sch
Title: WT32-ETH01 Pixel Driver - MLP201207
Size: A4
Date: 28th January 2024
Rev: 1.1