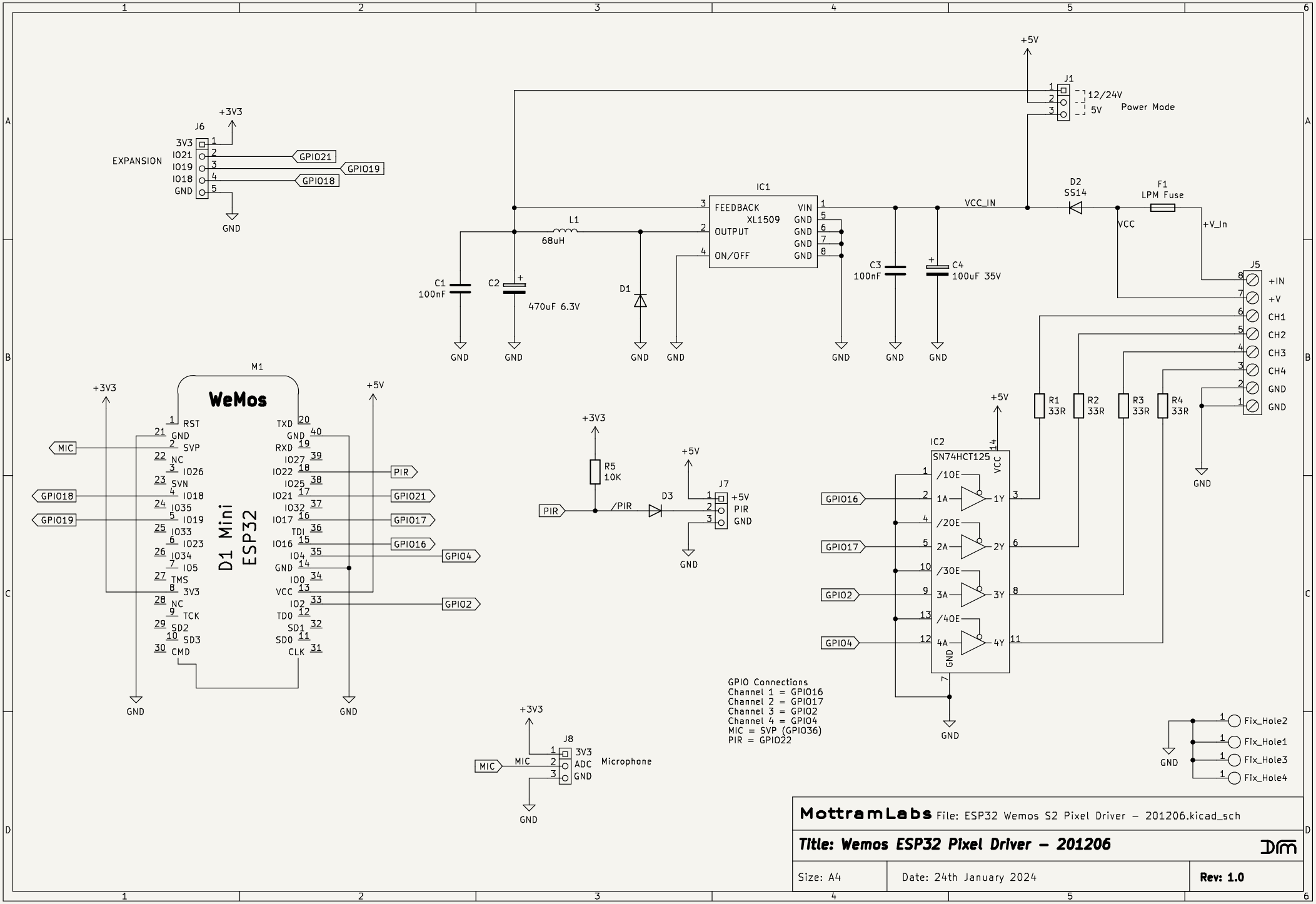

MottramLabs File: ESP32 Wemos S2 Pixel Driver – 201206.kicad_sch

Title: Wemos ESP32 Pixel Driver – 201206

Size: A4	Date: 24th January 2024	Rev: 1.0