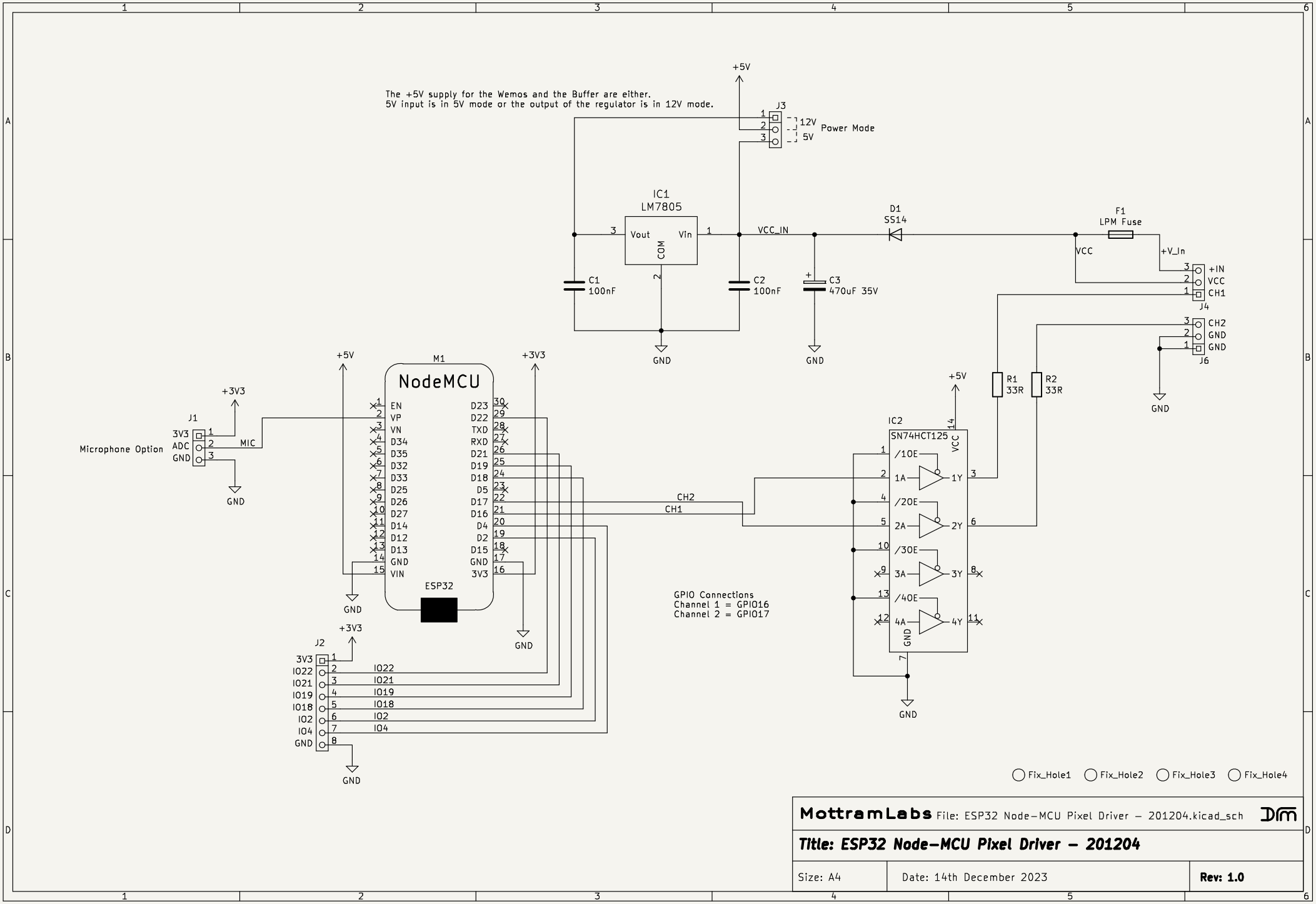
The +5V supply for the Wemos and the Buffer are either.
5V input is in 5V mode or the output of the regulator is in 12V mode.
+5V
J3
12V
5V
Power Mode
IC1
LM7805
Vout
Vin
COM
VCC_IN
D1
SS14
F1
LPM Fuse
VCC
+V_In
C1
100nF
C2
100nF
C3
470uF 35V
GND
J4
+IN
VCC
CH1
J6
CH2
GND
GND
R1
33R
R2
33R
IC2
SN74HCT125
/1OE
1A
1Y
/2OE
2A
2Y
/3OE
3A
3Y
/4OE
4A
4Y
VCC
GND
M1
NodeMCU
ESP32
EN
VP
VN
D34
D35
D32
D33
D25
D26
D27
D14
D12
D13
GND
VIN
D23
D22
TXD
RXD
D21
D19
D18
D5
D17
D16
D4
D2
D15
GND
3V3
CH2
CH1
GPIO Connections
Channel 1 = GPIO16
Channel 2 = GPIO17
J1
3V3
ADC
GND
Microphone Option
MIC
J2
3V3
IO22
IO21
IO19
IO18
IO2
IO4
GND
Fix_Hole1
Fix_Hole2
Fix_Hole3
Fix_Hole4
MottramLabs
File: ESP32 Node-MCU Pixel Driver - 201204.kicad_sch
Title: ESP32 Node-MCU Pixel Driver - 201204
Size: A4
Date: 14th December 2023
Rev: 1.0