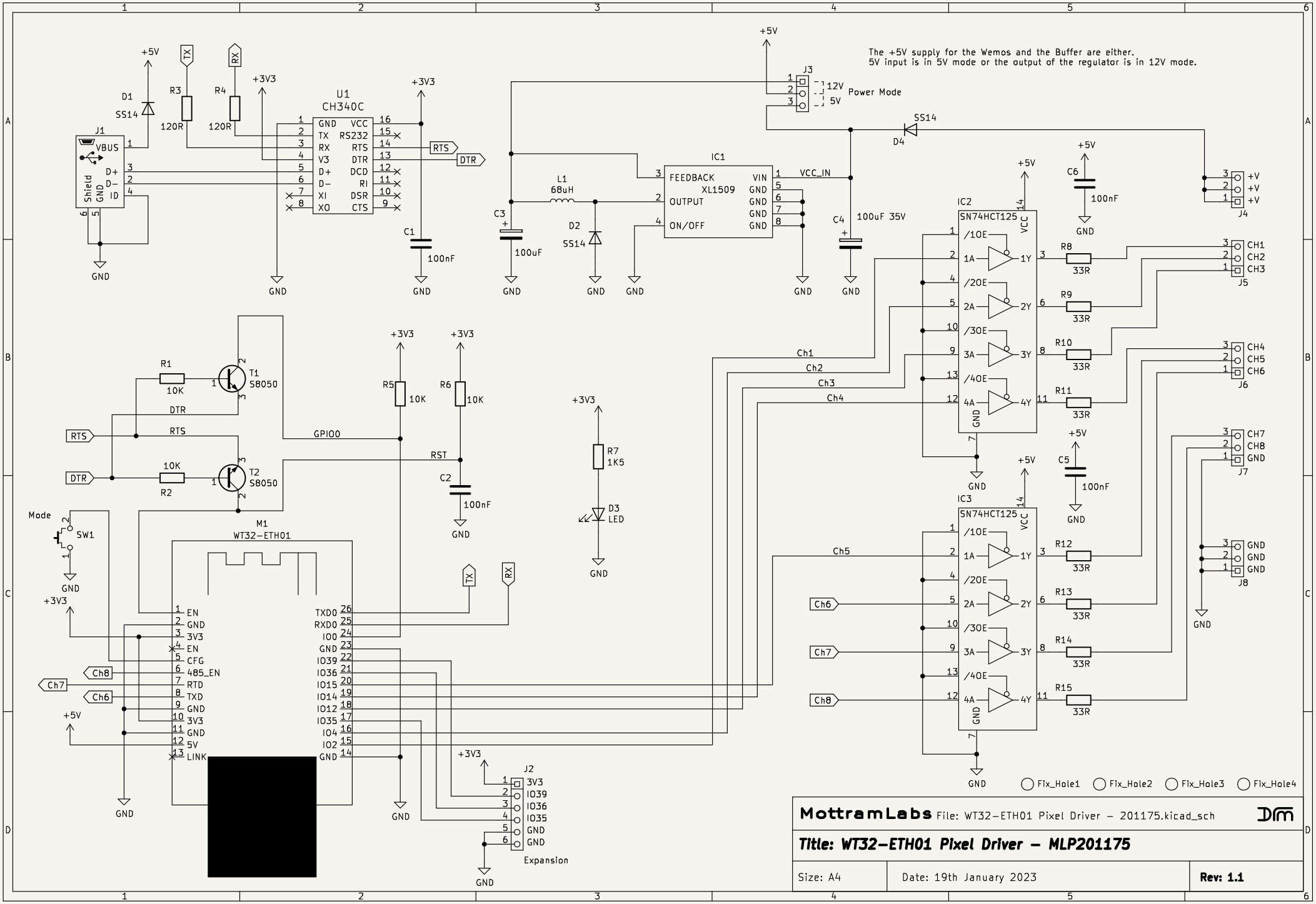
The +5V supply for the Wemos and the Buffer are either.
5V input is in 5V mode or the output of the regulator is in 12V mode.
J3
12V
5V
Power Mode
SS14
D4
J1
VBUS
D+
D-
ID
Shield
GND
D1
SS14
R3
120R
R4
120R
TX
RX
U1
CH340C
GND
TX
RX
V3
D+
D-
XI
XO
VCC
RS232
RTS
DTR
DCD
RI
DSR
CTS
C1
100nF
IC1
FEEDBACK
XL1509
OUTPUT
ON/OFF
VIN
VCC_IN
L1
68uH
D2
SS14
C3
100uF
C4
100uF 35V
IC2
SN74HCT125
/1OE
1A
/2OE
2A
/3OE
3A
/4OE
4A
1Y
2Y
3Y
4Y
VCC
C6
100nF
C5
100nF
R8
R9
R10
R11
R12
R13
R14
R15
33R
J4
+V
J5
CH1
CH2
CH3
J6
CH4
CH5
CH6
J7
CH7
CH8
J8
Ch1
Ch2
Ch3
Ch4
Ch5
Ch6
Ch7
Ch8
R1
10K
T1
S8050
R2
10K
T2
S8050
DTR
RTS
GPIO0
RST
R5
10K
R6
10K
C2
100nF
R7
1K5
D3
LED
Mode
SW1
M1
WT32-ETH01
EN
GND
3V3
CFG
485_EN
RTD
TXD
5V
LINK
TXD0
RXD0
IO0
IO39
IO36
IO15
IO14
IO12
IO35
IO4
IO2
J2
Expansion
Fix_Hole1
Fix_Hole2
Fix_Hole3
Fix_Hole4
MottramLabs File: WT32-ETH01 Pixel Driver - 201175.kicad_sch
Title: WT32-ETH01 Pixel Driver - MLP201175
Size: A4
Date: 19th January 2023
Rev: 1.1