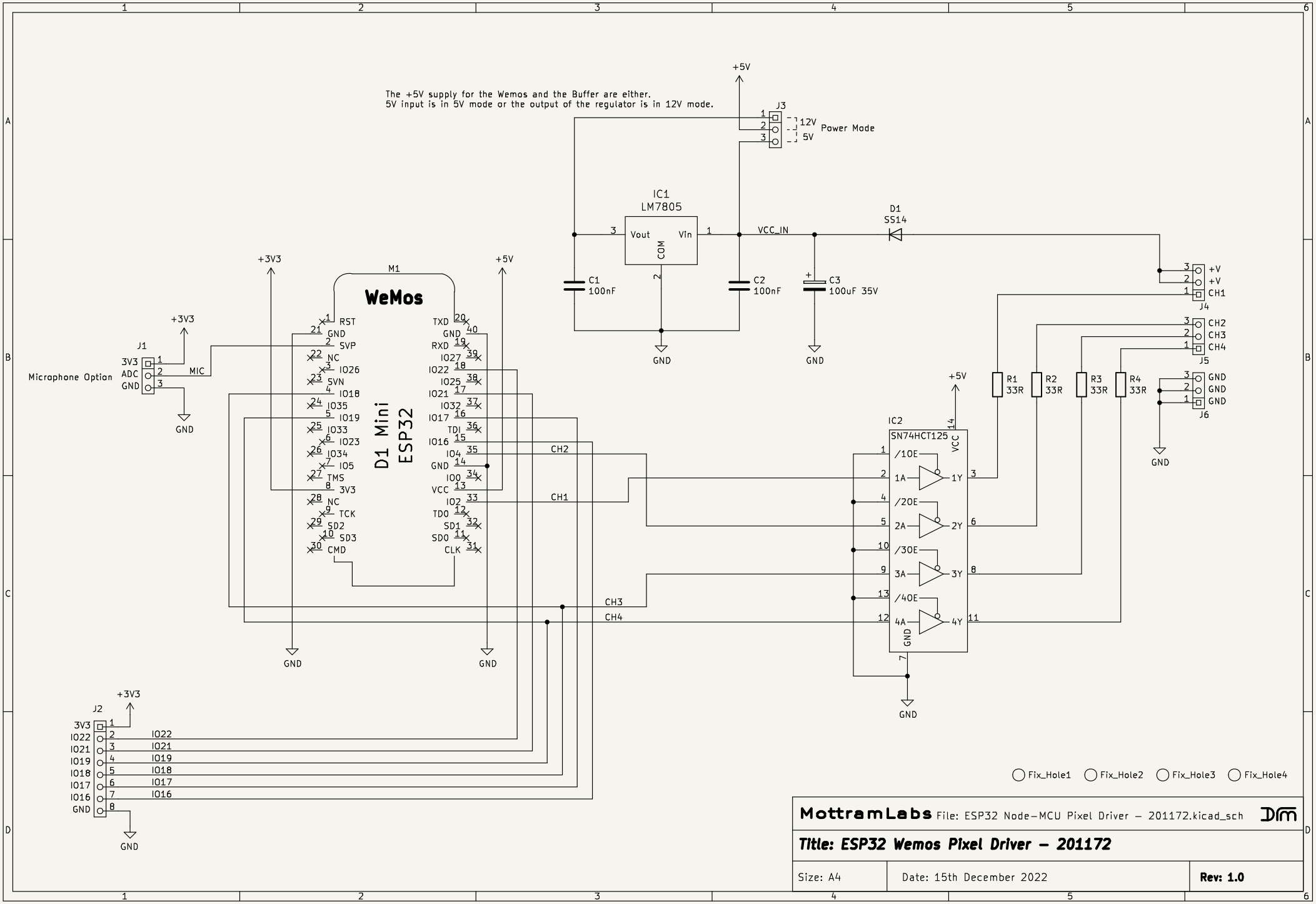
The +5V supply for the Wemos and the Buffer are either.
5V input is in 5V mode or the output of the regulator is in 12V mode.
J3
12V
5V
Power Mode
IC1
LM7805
Vout
Vin
COM
VCC_IN
D1
SS14
C1
100nF
C2
100nF
C3
100uF 35V
GND
+5V
+3V3
M1
WeMos
D1 Mini
ESP32
RST
GND
SVP
NC
IO26
SVN
IO18
IO35
IO19
IO33
IO23
IO34
IO5
TMS
3V3
NC
TCK
SD2
SD3
CMD
TXD
GND
RXD
IO27
IO22
IO25
IO21
IO32
IO17
TDI
IO16
IO4
GND
IO0
VCC
IO2
TDO
SD1
SD0
CLK
J1
3V3
ADC
GND
Microphone Option
MIC
J2
3V3
IO22
IO21
IO19
IO18
IO17
IO16
GND
CH1
CH2
CH3
CH4
IC2
SN74HCT125
/1OE
1A
1Y
/2OE
2A
2Y
/3OE
3A
3Y
/4OE
4A
4Y
VCC
GND
R1
33R
R2
33R
R3
33R
R4
33R
J4
+V
+V
CH1
J5
CH2
CH3
CH4
J6
GND
GND
GND
Fix_Hole1
Fix_Hole2
Fix_Hole3
Fix_Hole4
MottramLabs
File: ESP32 Node-MCU Pixel Driver - 201172.kicad_sch
Title: ESP32 Wemos Pixel Driver - 201172
Size: A4
Date: 15th December 2022
Rev: 1.0