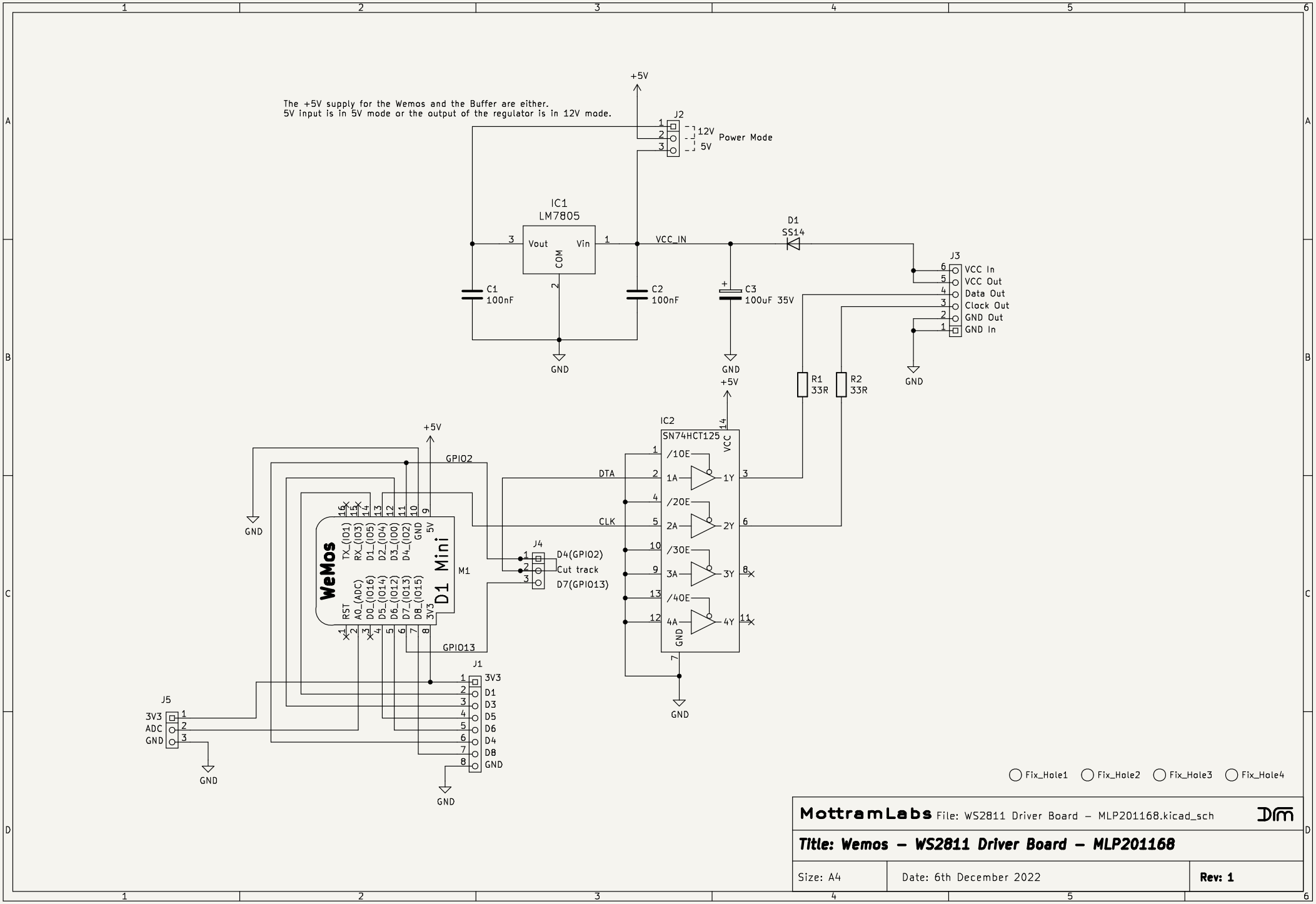
The +5V supply for the Wemos and the Buffer are either.
5V input is in 5V mode or the output of the regulator is in 12V mode.
+5V
J2
12V
5V
Power Mode
IC1
LM7805
Vout
Vin
COM
VCC_IN
D1
SS14
C1
100nF
C2
100nF
C3
100uF 35V
GND
J3
VCC In
VCC Out
Data Out
Clock Out
GND Out
GND In
R1
33R
R2
33R
IC2
SN74HCT125
/1OE
1A
1Y
/2OE
2A
2Y
/3OE
3A
3Y
/4OE
4A
4Y
VCC
DTA
CLK
GPIO2
GPIO13
J4
D4(GPIO2)
Cut track
D7(GPIO13)
WeMos
D1 Mini
M1
TX_(IO1)
RX_(IO3)
D1_(IO5)
D2_(IO4)
D3_(IO0)
D4_(IO2)
RST
A0_(ADC)
D0_(IO16)
D5_(IO14)
D6_(IO12)
D7_(IO13)
D8_(IO15)
3V3
J1
3V3
D1
D3
D5
D6
D4
D8
GND
J5
3V3
ADC
GND
Fix_Hole1
Fix_Hole2
Fix_Hole3
Fix_Hole4
MottramLabs File: WS2811 Driver Board – MLP201168.kicad_sch
Title: Wemos – WS2811 Driver Board – MLP201168
Size: A4
Date: 6th December 2022
Rev: 1