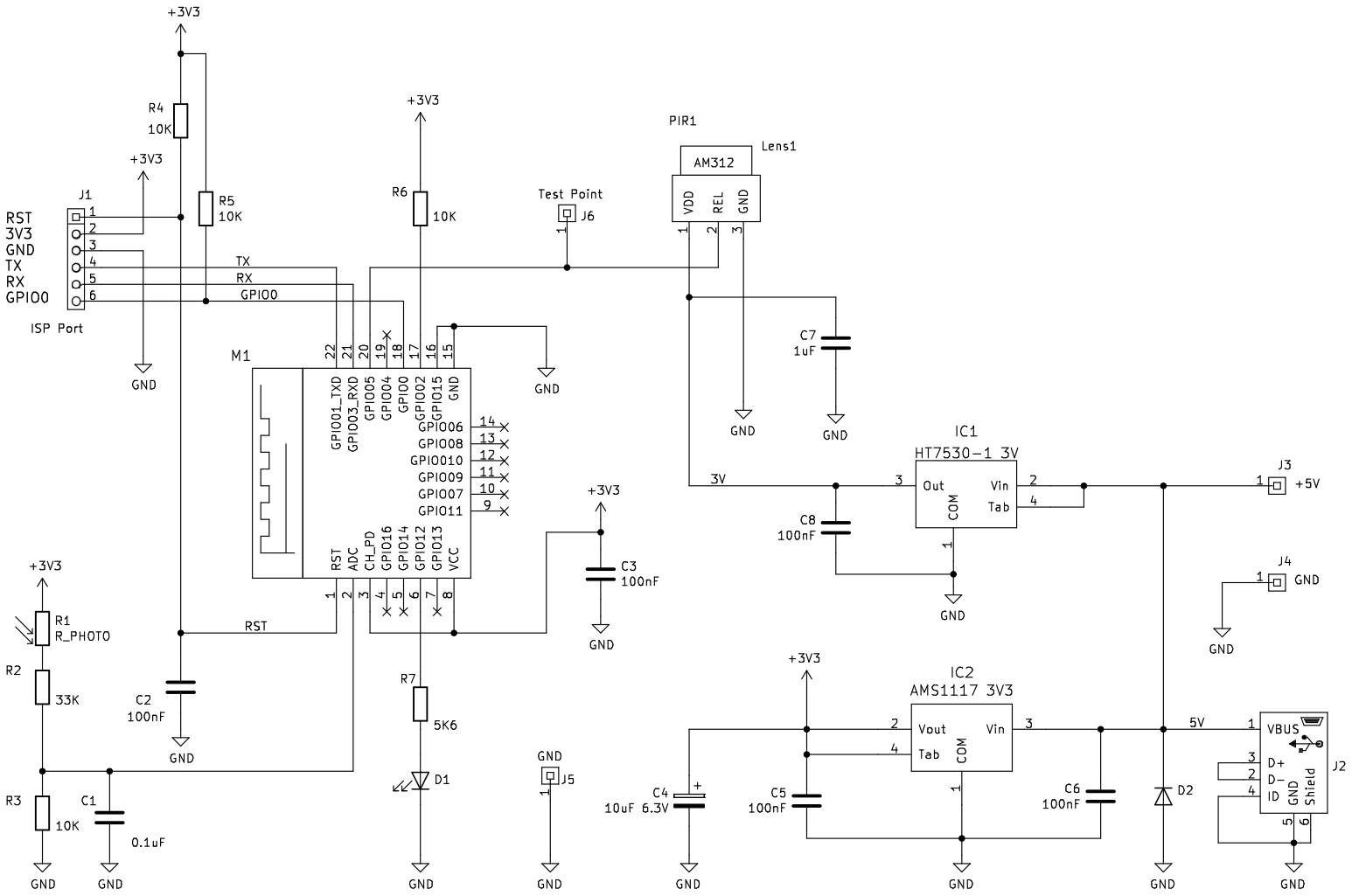

Fix_Hole1 Fix_Hole2 Fix_Hole3 Fix_Hole4

MottramLabs	File: ESP8266 PIR With AM312 - 201154.kicad_sch	
Title: ESP8266 PIR With AM312 - MLP201154		
Size: A4	Date: 22nd January 2022	**Rev: 1**