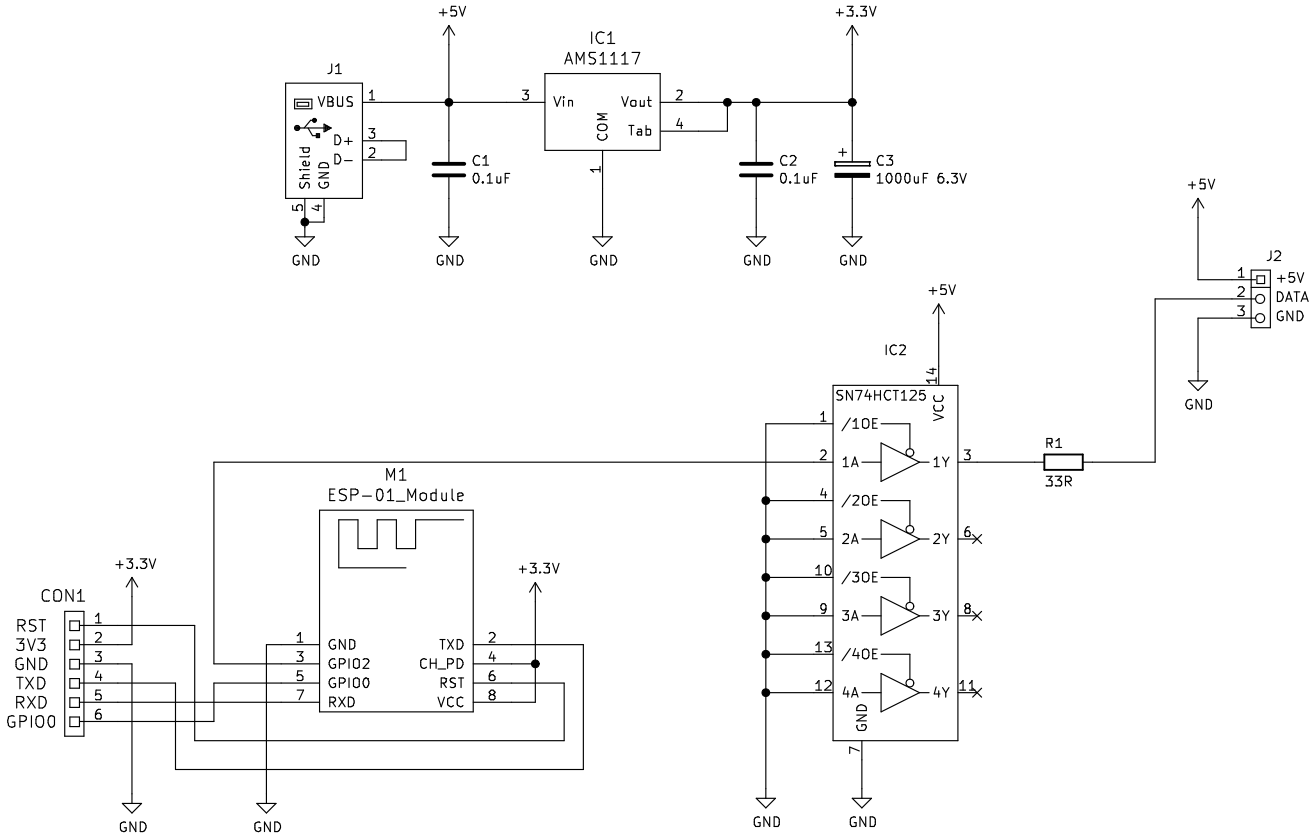

MottramLabs.com File: ESP01 WS2812 Driver.sch

Title: ESP01 WS2812 Driver – WLED

Size: A4	Date: 21st November 2019	**Rev: 1**