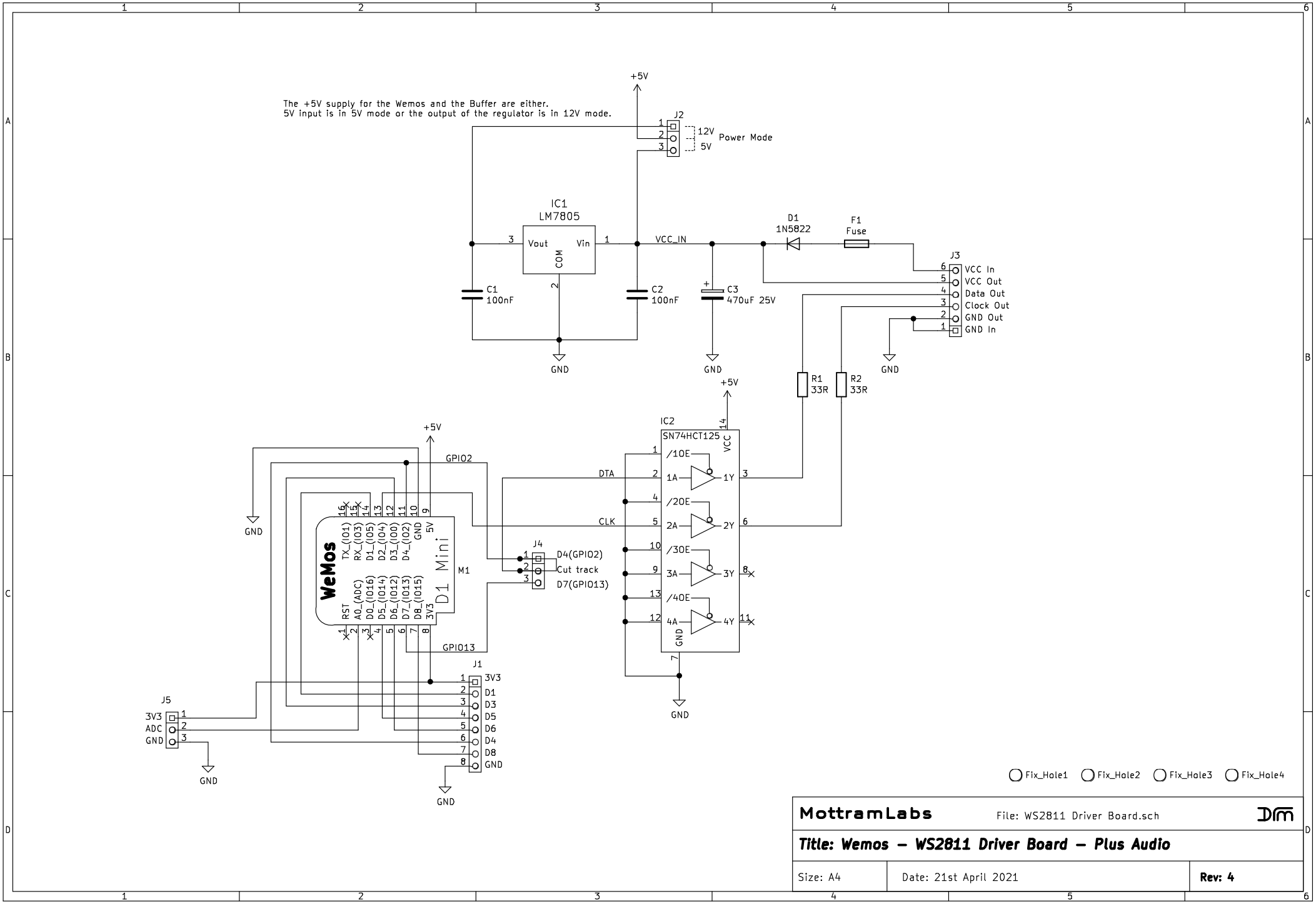
The +5V supply for the Wemos and the Buffer are either.
5V input is in 5V mode or the output of the regulator is in 12V mode.
+5V
J2
12V
5V
Power Mode
IC1
LM7805
Vout
Vin
COM
VCC_IN
D1
1N5822
F1
Fuse
J3
VCC In
VCC Out
Data Out
Clock Out
GND Out
GND In
C1
100nF
C2
100nF
C3
470uF 25V
GND
R1
33R
R2
33R
IC2
SN74HCT125
/1OE
1A
1Y
/2OE
2A
2Y
/3OE
3A
3Y
/4OE
4A
4Y
VCC
DTA
CLK
GPIO2
GPIO13
J4
D4(GPIO2)
Cut track
D7(GPIO13)
WeMos
D1 Mini
M1
TX_(IO1)
RX_(IO3)
D1_(IO5)
D2_(IO4)
D3_(IO0)
D4_(IO2)
GND
5V
RST
A0_(ADC)
D0_(IO16)
D5_(IO14)
D6_(IO12)
D7_(IO13)
D8_(IO15)
3V3
J1
3V3
D1
D3
D5
D6
D4
D8
GND
J5
3V3
ADC
GND
Fix_Hole1
Fix_Hole2
Fix_Hole3
Fix_Hole4
MottramLabs
File: WS2811 Driver Board.sch
Title: Wemos – WS2811 Driver Board – Plus Audio
Size: A4
Date: 21st April 2021
Rev: 4