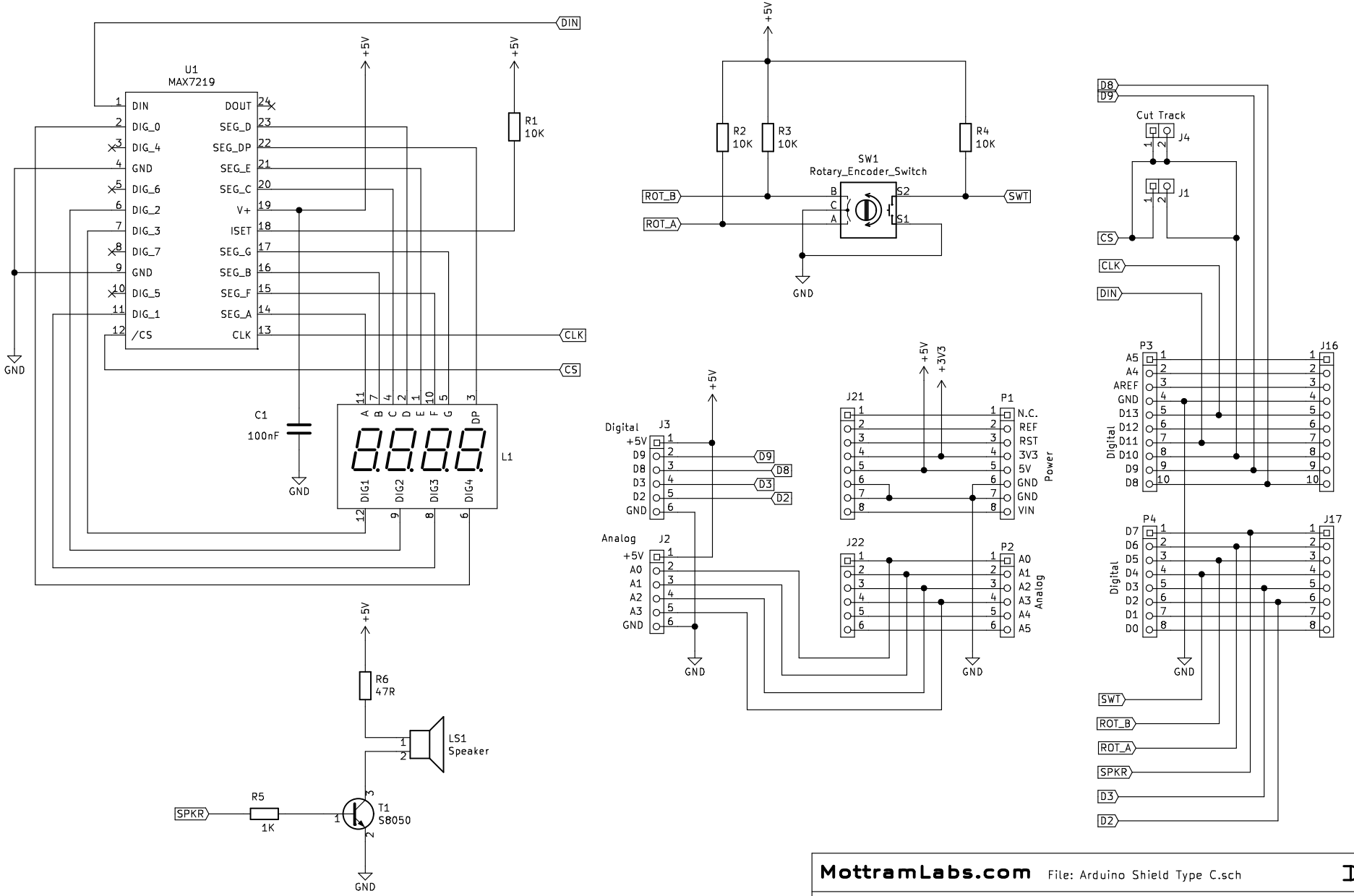

MottramLabs.com File: Arduino Shield Type C.sch

Title: Arduino Prototype Shield Type C

Size: A4	Date: 1st April 2019	Rev: 1

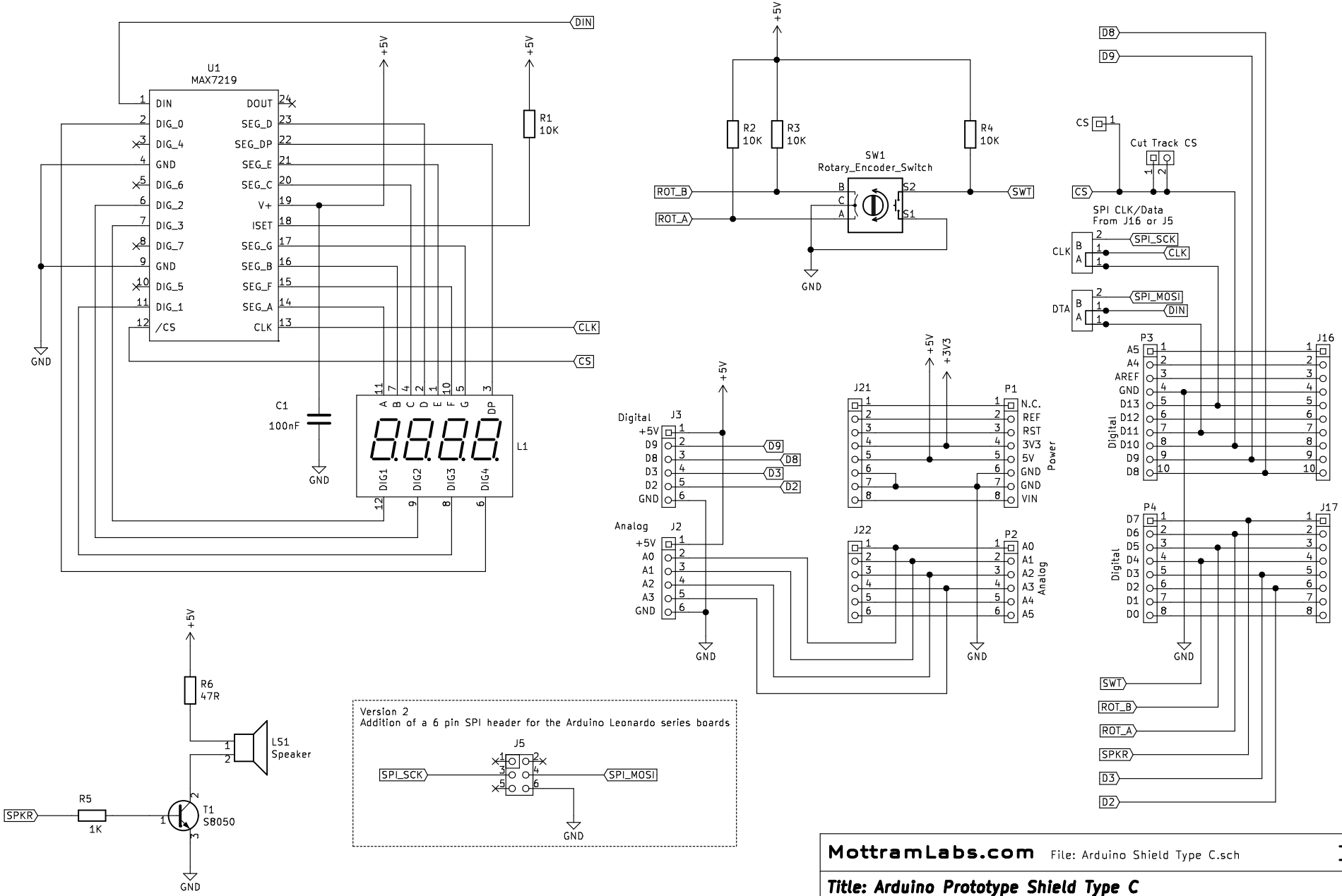
U1
MAX7219
DIN
DIG_0
DIG_4
GND
DIG_6
DIG_2
DIG_3
DIG_7
GND
DIG_5
DIG_1
/CS
DOUT
SEG_D
SEG_DP
SEG_E
SEG_C
V+
ISET
SEG_G
SEG_B
SEG_F
SEG_A
CLK
+5V
R1
10K
C1
100nF
L1
DIG1
DIG2
DIG3
DIG4
R2
10K
R3
10K
R4
10K
SW1
Rotary_Encoder_Switch
ROT_B
ROT_A
SWT
CS
Cut Track CS
SPI CLK/Data
From J16 or J5
SPI_SCK
SPI_MOSI
DTA
Digital
J3
Analog
J2
J21
J22
P1
P2
P3
P4
J16
J17
N.C.
REF
RST
3V3
5V
GND
VIN
Power
A0
A1
A2
A3
A4
A5
AREF
D13
D12
D11
D10
D9
D8
D7
D6
D5
D4
D3
D2
D1
D0
SPKR
R5
1K
R6
47R
LS1
Speaker
T1
S8050
Version 2
Addition of a 6 pin SPI header for the Arduino Leonardo series boards
J5
MottramLabs.com
File: Arduino Shield Type C.sch
Title: Arduino Prototype Shield Type C
Size: A4
Date: 17th April 2019
Rev: 2