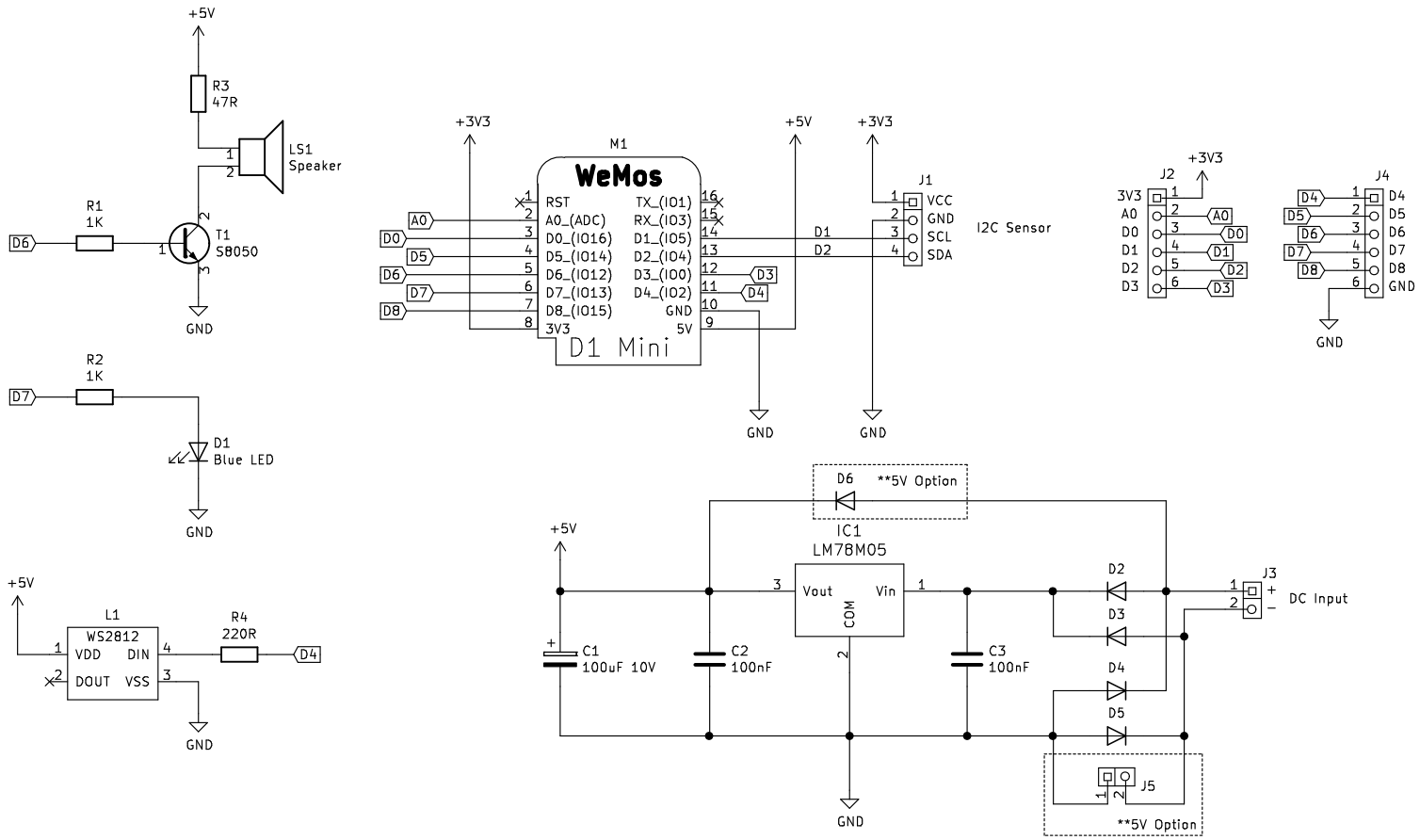

Fix_Hole1 Fix_Hole2 Fix_Hole3 Fix_Hole4

MottramLabs.com File: Wemos Outdoor Sensor V1.sch		
Title: Wemos – Outdoor Sensor Pod		
Size: A4	Date:	**Rev: 1**